SEW EURODRIVE

A new wave for twice the service life

NEW: Premium Sine Seal oil seal

New sealing system for gearmotors

Different formats, flexible processes, high availability – modern production systems place demanding requirements on the technology they employ. For the drive technology used in these systems, that means dynamic speeds, changing directions of rotation and variable loads. And the sealing systems used in the gearmotors have to meet these challenges as well.

That is why we partnered with Freudenberg Sealing Technologies to develop a new oil seal for the input motor shaft on gearmotors: the **Premium Sine Seal**. The term "Sine" refers to the sinusoidal shape of the sealing lip. This wave-like shape causes the elastomer of the sealing lip to wear extremely slowly. That is because the elastomer is subject to less thermal strain. The sinusoidal shape also improves the transfer of lubricant at the sealing surface. The result is a service life that is more than twice as long as that of conventional oil seals.

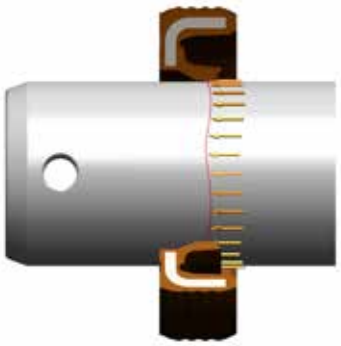

The new sinusoidal sealing lip

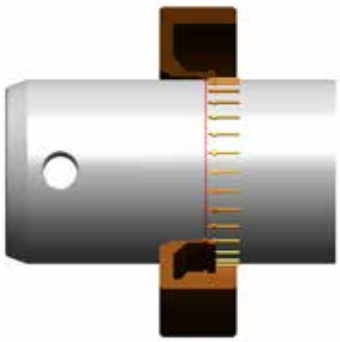

Conventional sealing lip

At a glance:

- The oil seal does not run in on the shaft
- Replacement oil seals can be installed in the same location on the shaft
- The rate of wear on the sealing lip is decreased by about 50% when tested according to SEW-EURODRIVE specifications
- Expected service life increases by a factor of 2 (compared to other systems on the market)
- Longer intervals between required oil seal maintenance

In practice, this means:

- Lower maintenance costs
- Improves protection against oil losses and leakage
- Higher system availability

Premium Sine Seal oil seals are available for:

- Asynchronous gearmotors with AC motors of the DR.. series
- Synchronous servo gearmotors with servomotors of the CMP.. series
- MOVIGEAR® mechatronic drive systems

Areas of application:

- Packaging
- Food and beverage products
- Wood processing
- Baggage handling (airports)
- Automotive production
- Transport and logistics
- Handling and robotics
- Processing
- And many more

SEW EURODRIVE

SEW-EURODRIVE GmbH & Co KG
Ernst-Blickle-Str. 42
76646 Bruchsal/Germany
Tel. +49 7251 75-0
Fax +49 7251 75-1970
sew@sew-eurodrive.com

➟ www.sew-eurodrive.com

24775339 / 0220